1950 STUDEBAKER CHAMPION & COMMANDER

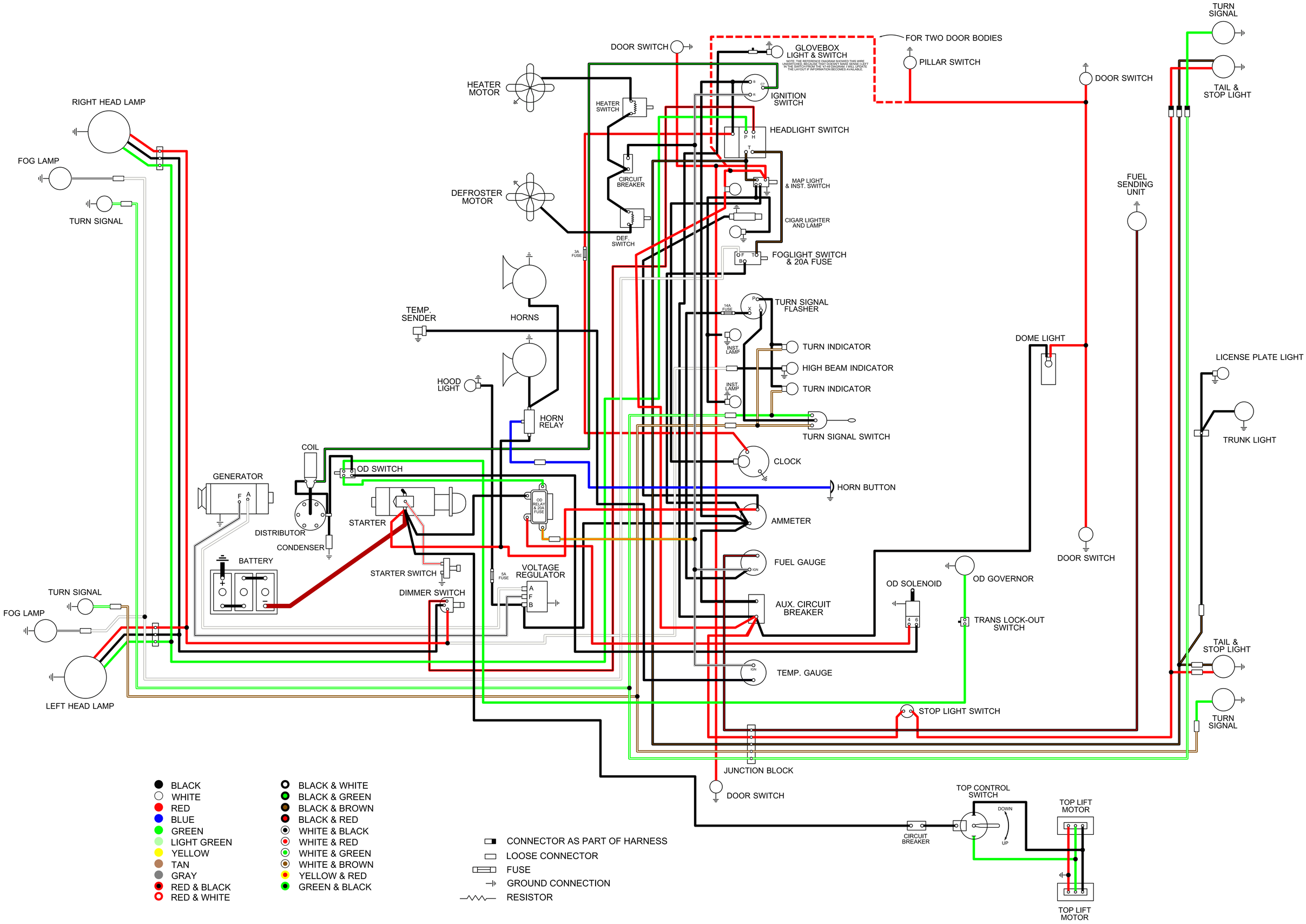

CINCO

1950 STUDEBAKER CHAMPION & COMMANDER

MAIN POWER

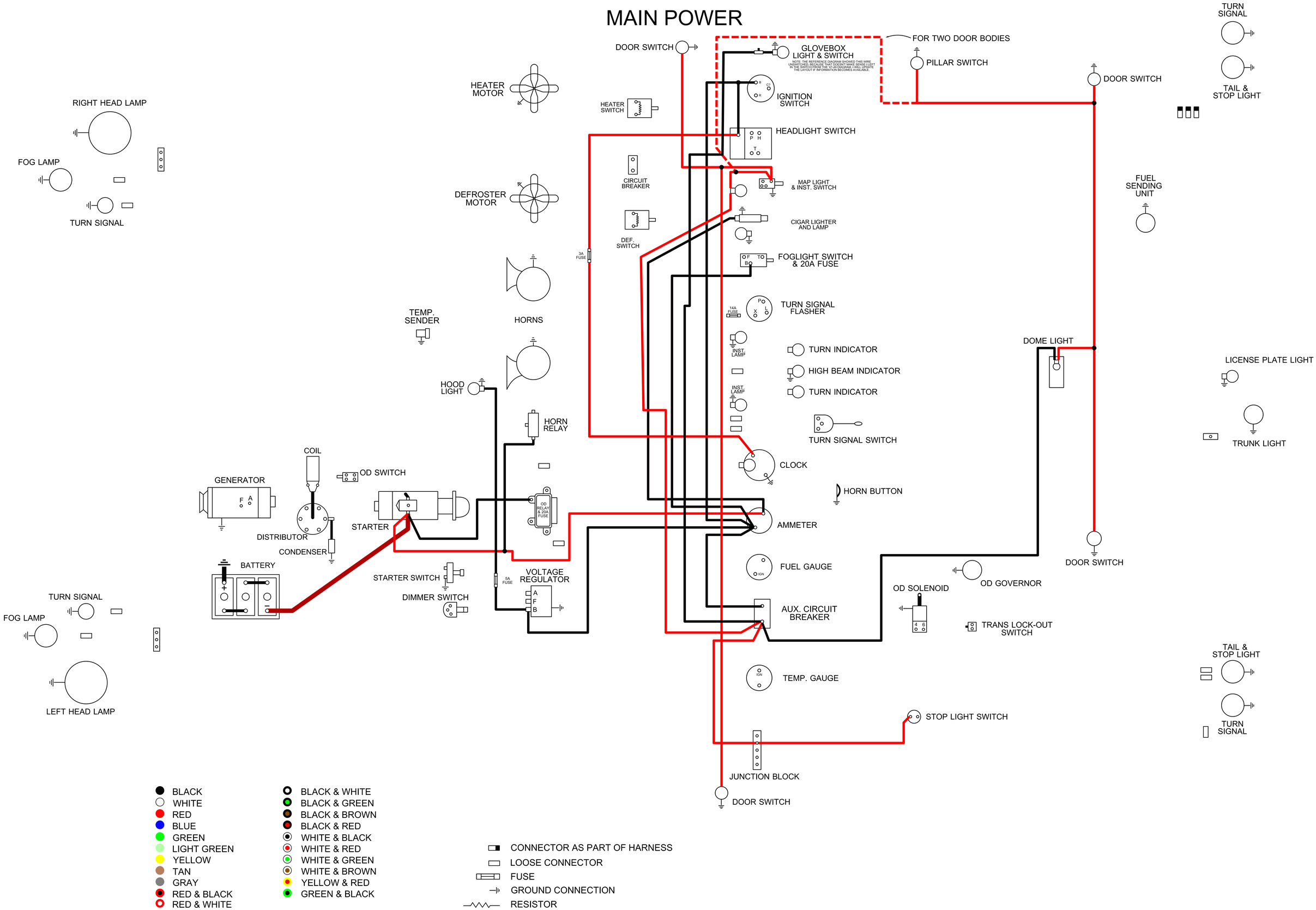

CINCO

1950 STUDEBAKER CHAMPION & COMMANDER

ACCESSORY POWER

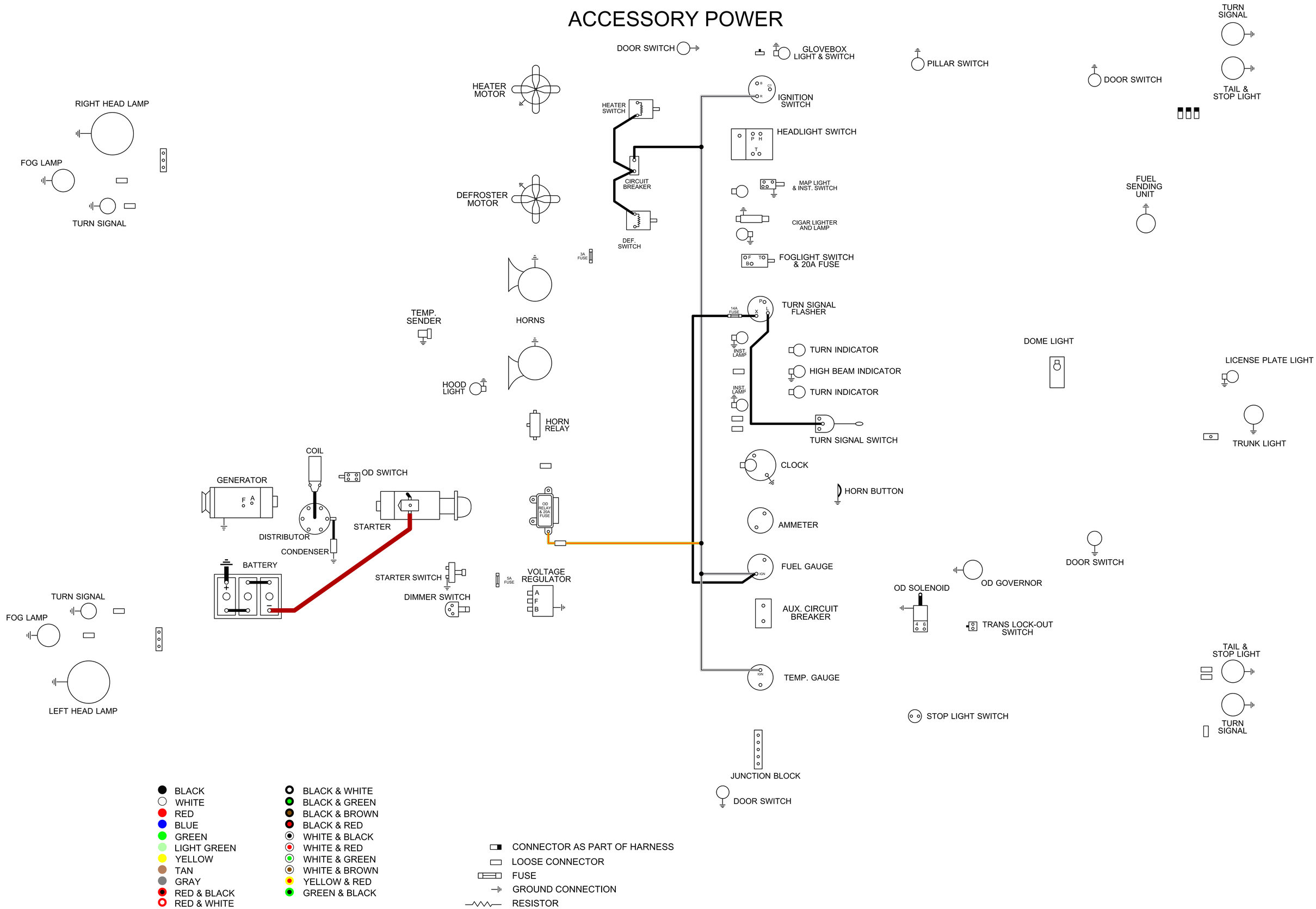

CINCO

1950 STUDEBAKER CHAMPION & COMMANDER

STARTER

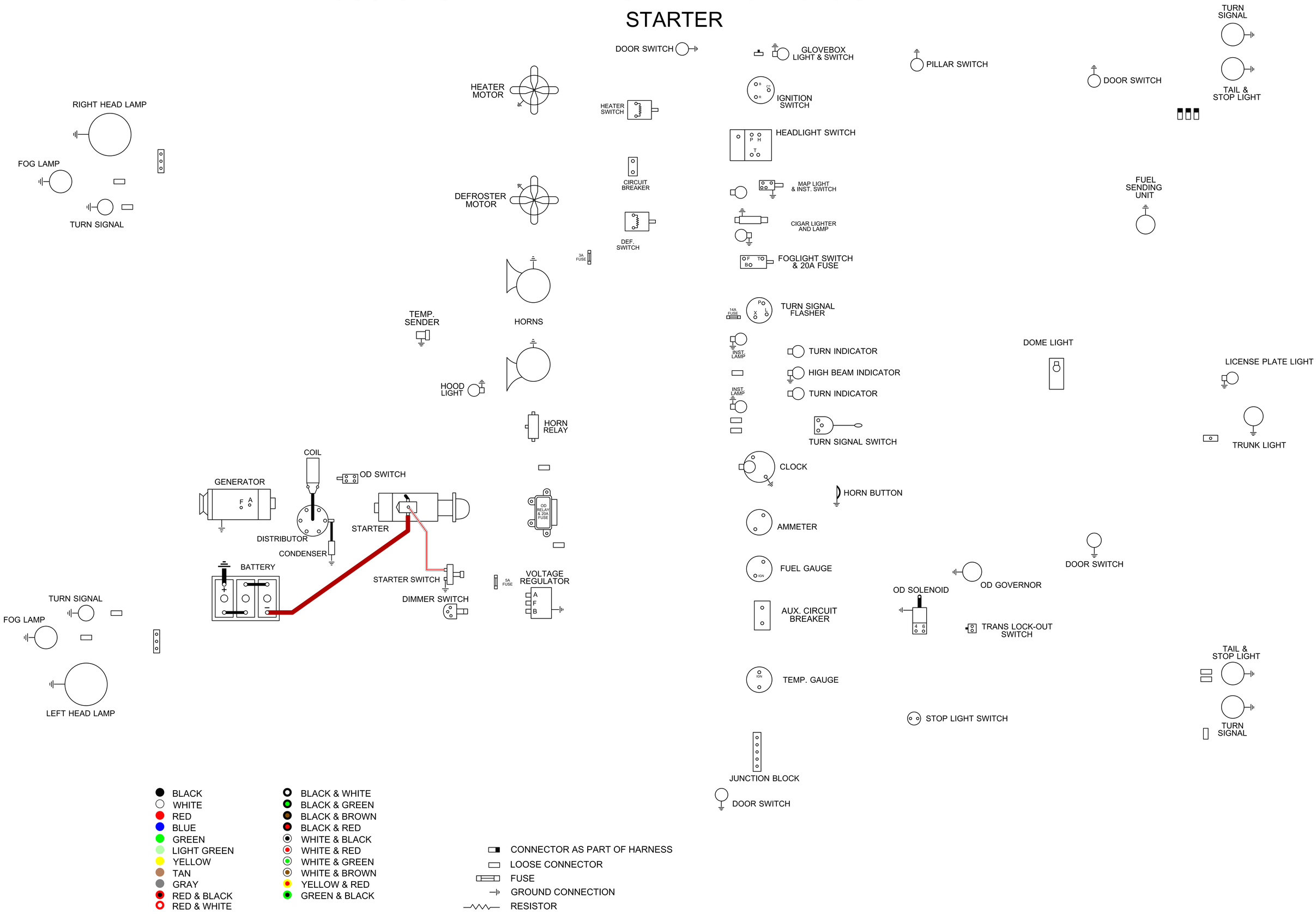

CINCO

1950 STUDEBAKER CHAMPION & COMMANDER

IGNITION SYSTEM

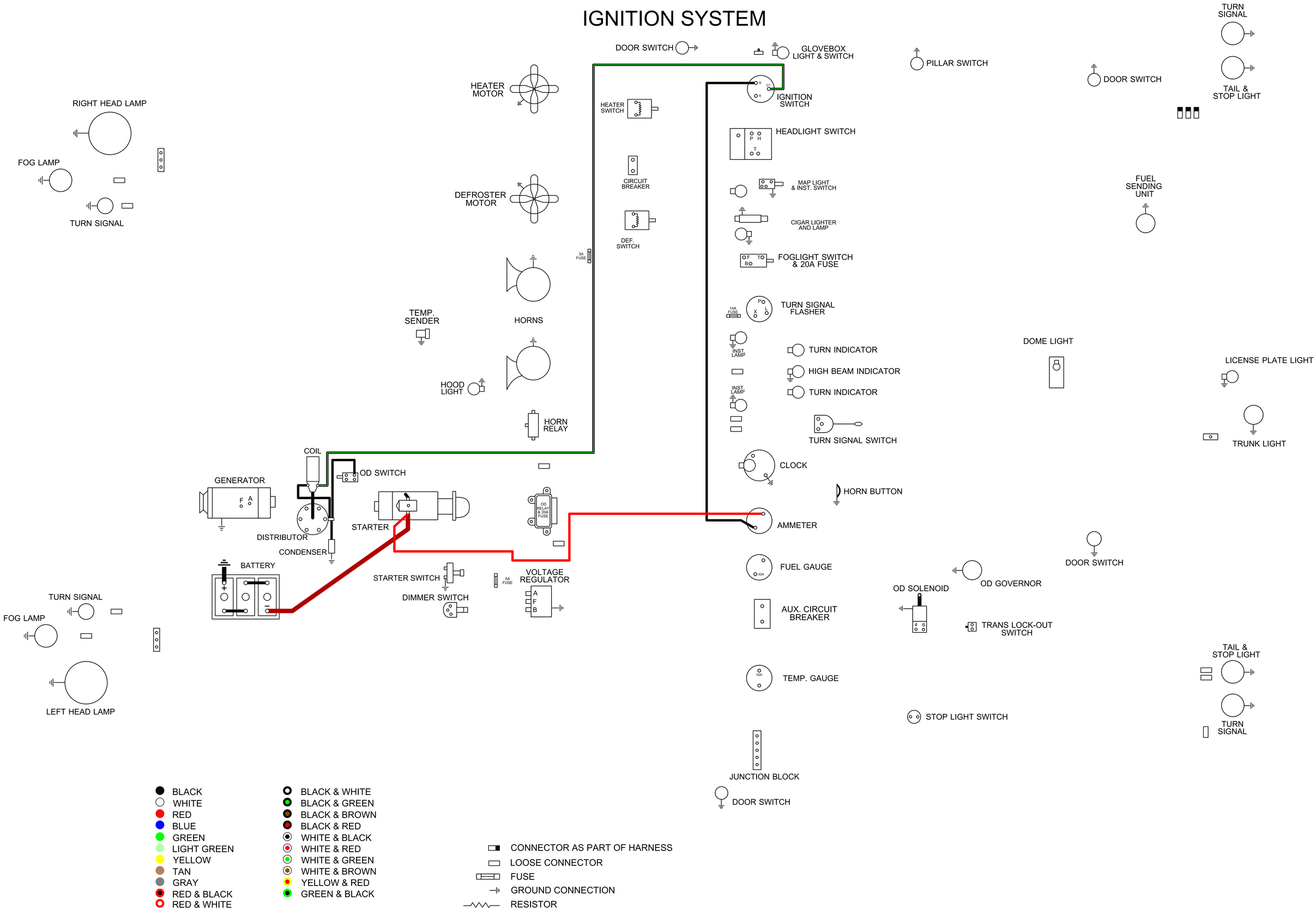

CINCO

1950 STUDEBAKER CHAMPION & COMMANDER

CHARGING SYSTEM

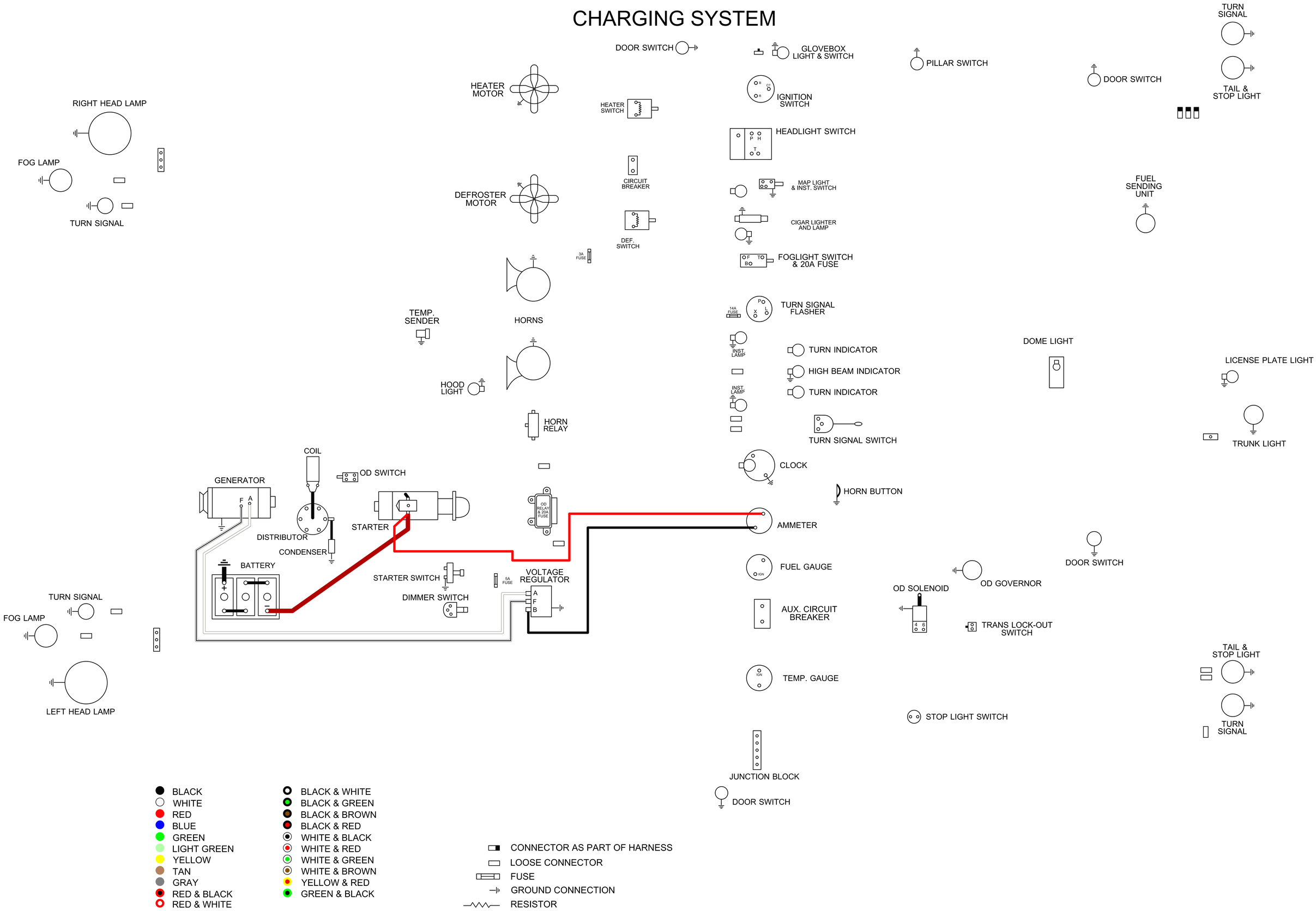

CINCO

1950 STUDEBAKER CHAMPION & COMMANDER

HEADLIGHTS

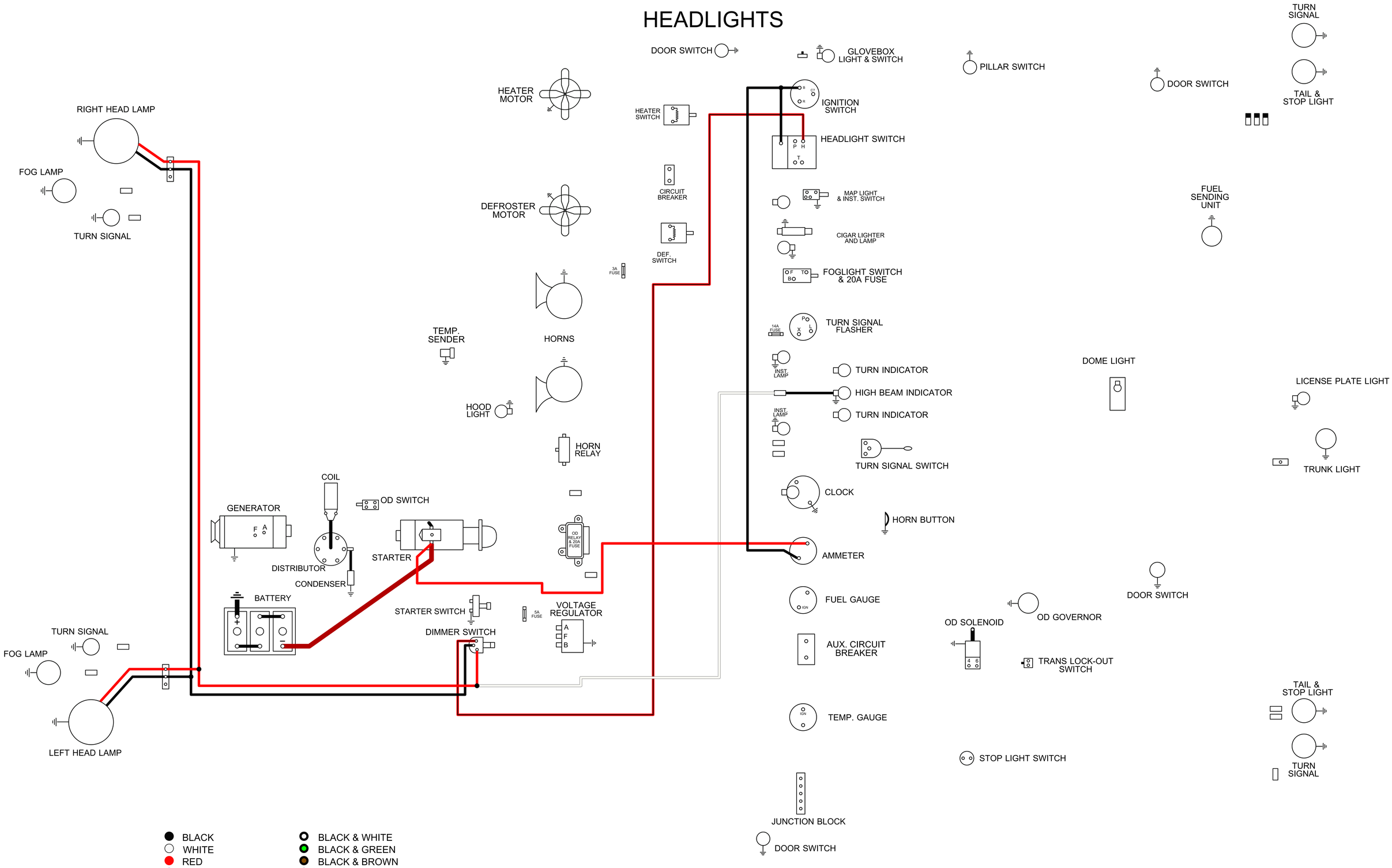

CINCO

1950 STUDEBAKER CHAMPION & COMMANDER

RUNNING LIGHTS

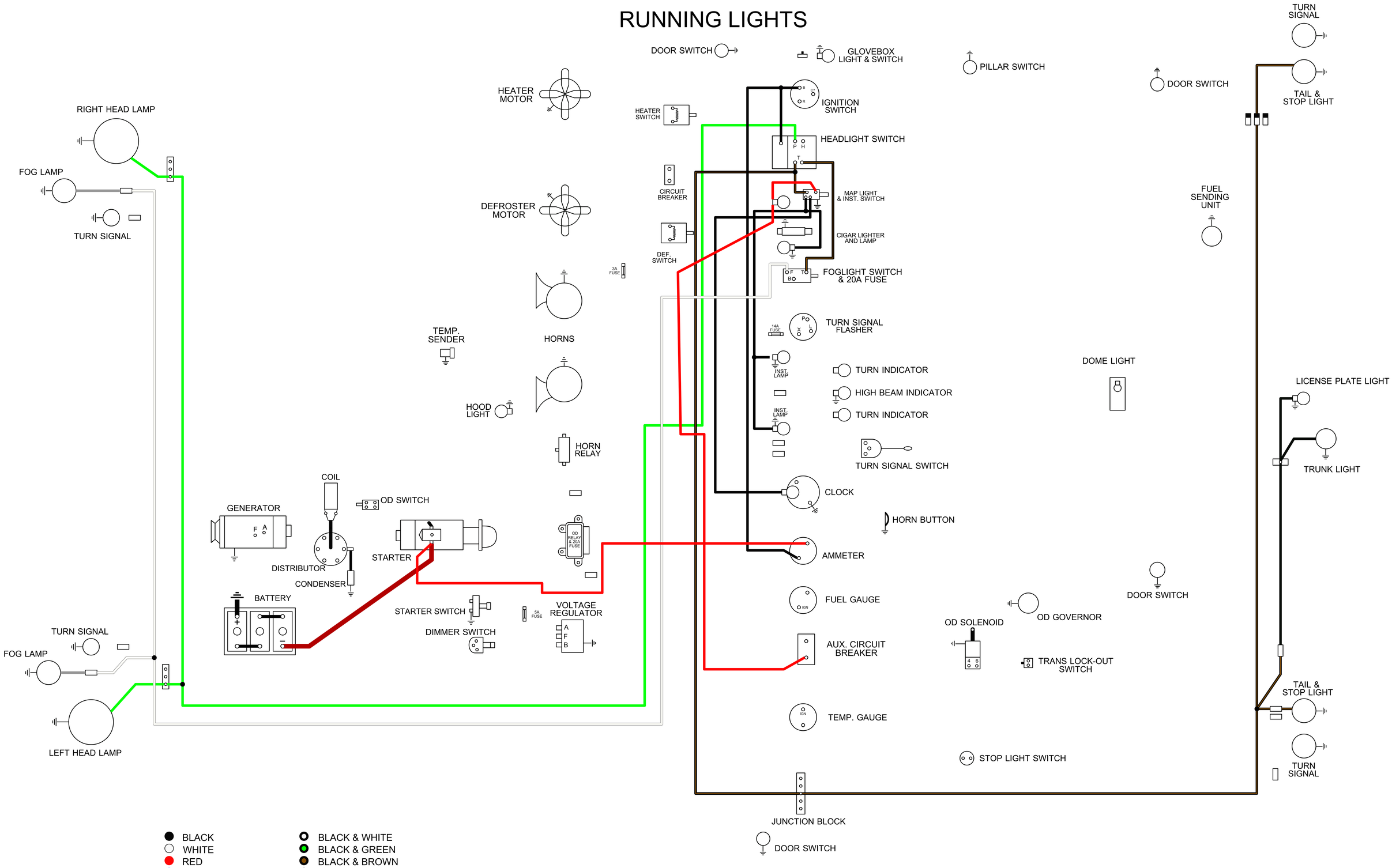

- BLACK
- WHITE
- RED
- BLUE
- GREEN
- LIGHT GREEN
- YELLOW
- TAN
- GRAY
- RED & BLACK
- RED & WHITE
- BLACK & WHITE
- BLACK & GREEN
- BLACK & BROWN
- BLACK & RED
- WHITE & BLACK
- WHITE & RED
- WHITE & GREEN
- WHITE & BROWN
- YELLOW & RED
- GREEN & BLACK

- CONNECTOR AS PART OF HARNESS
- LOOSE CONNECTOR
- FUSE
- GROUND CONNECTION
- RESISTOR

CINCO

1950 STUDEBAKER CHAMPION & COMMANDER

BRAKE LIGHTS

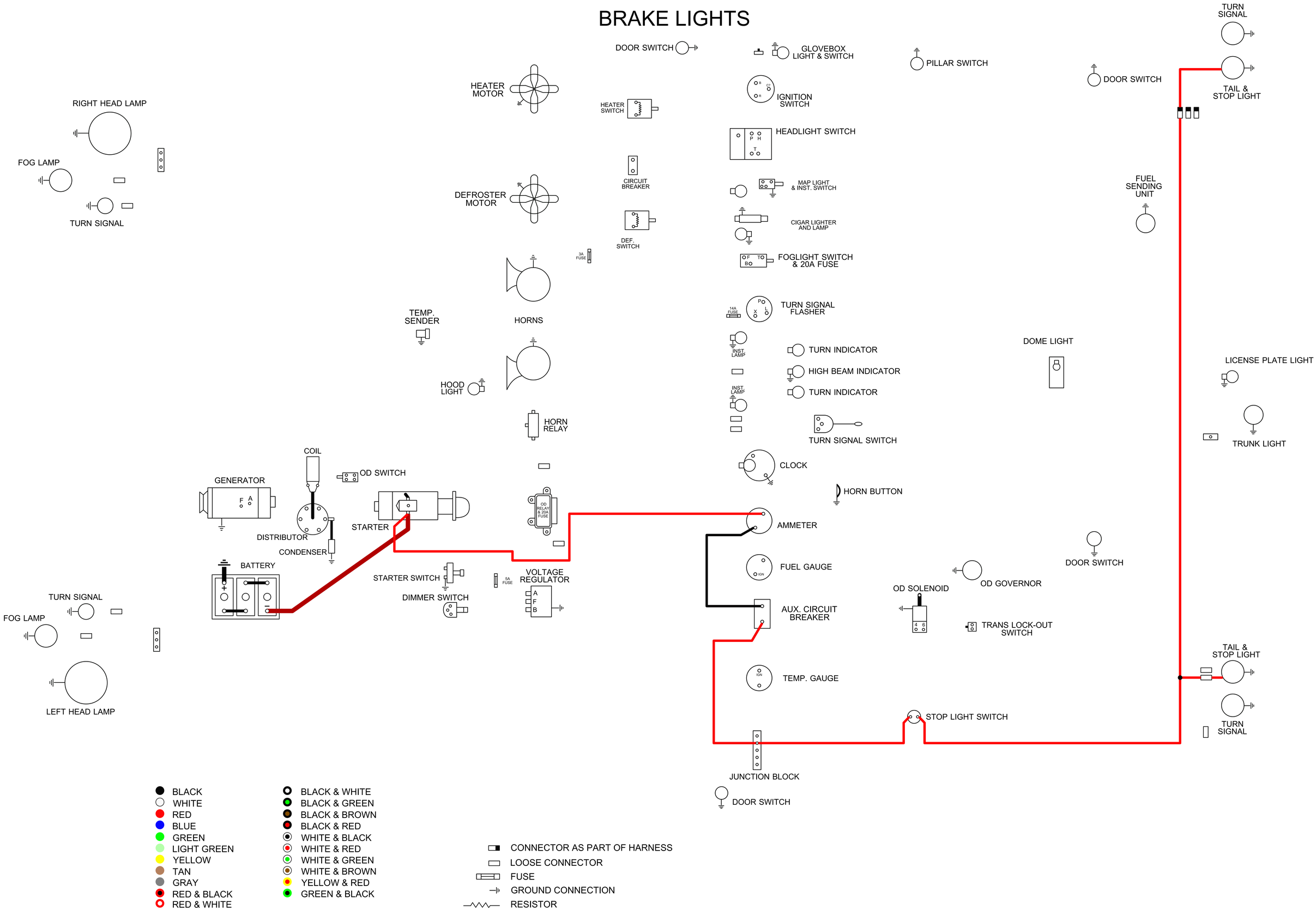

CINCO

1950 STUDEBAKER CHAMPION & COMMANDER

TURN SIGNALS

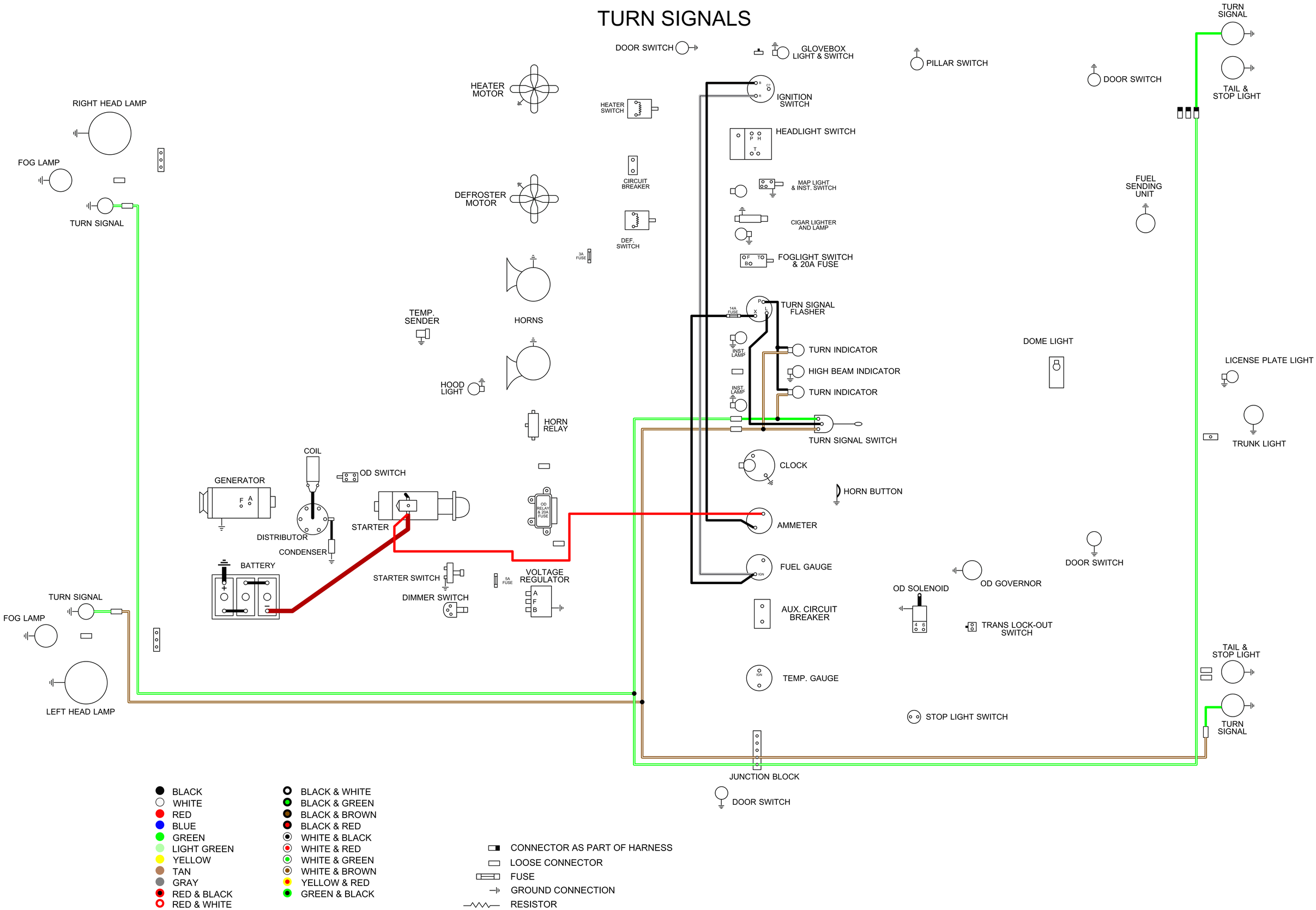

CINCO

1950 STUDEBAKER CHAMPION & COMMANDER

HEATER

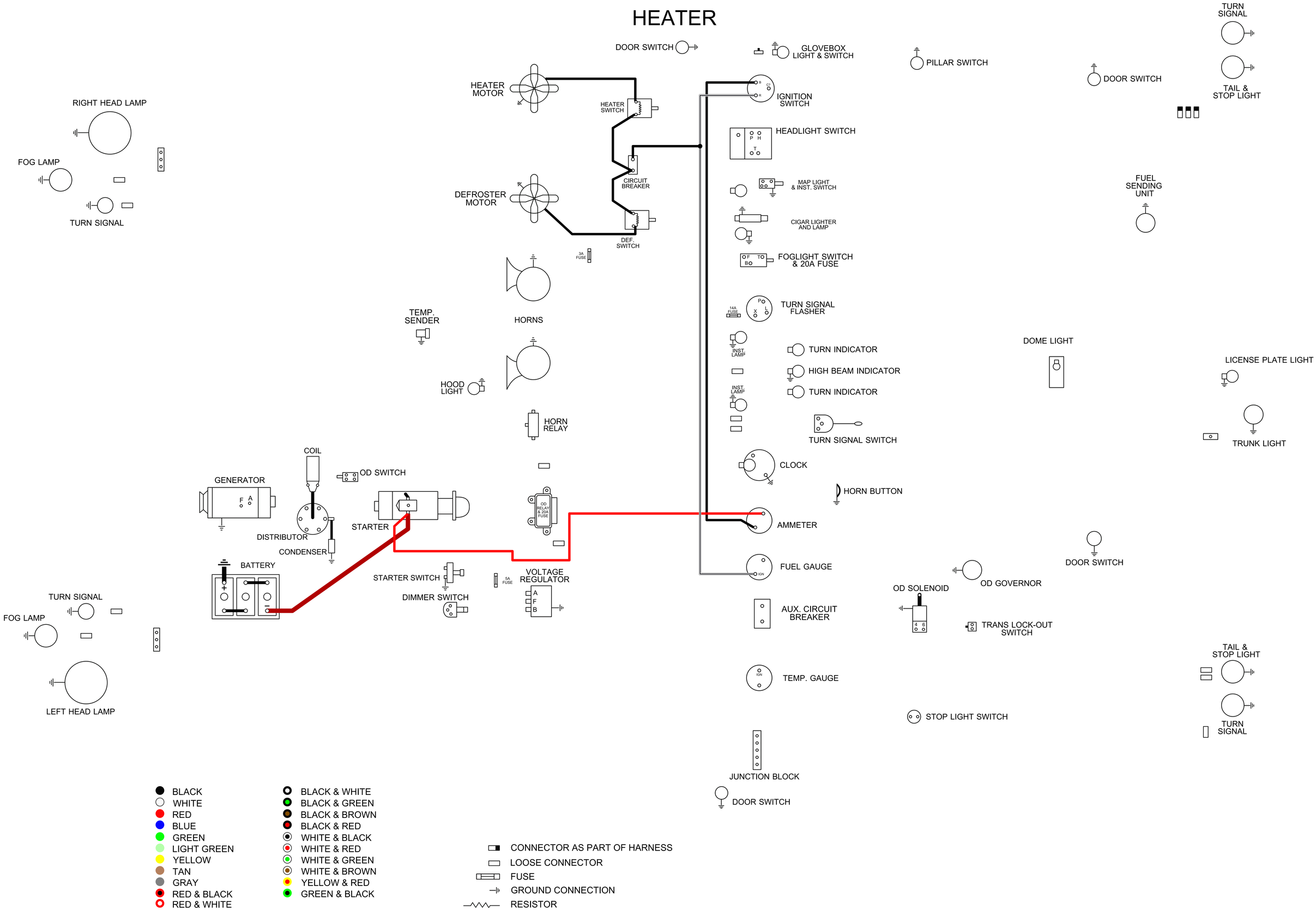

CINCO

1950 STUDEBAKER CHAMPION & COMMANDER

HORN

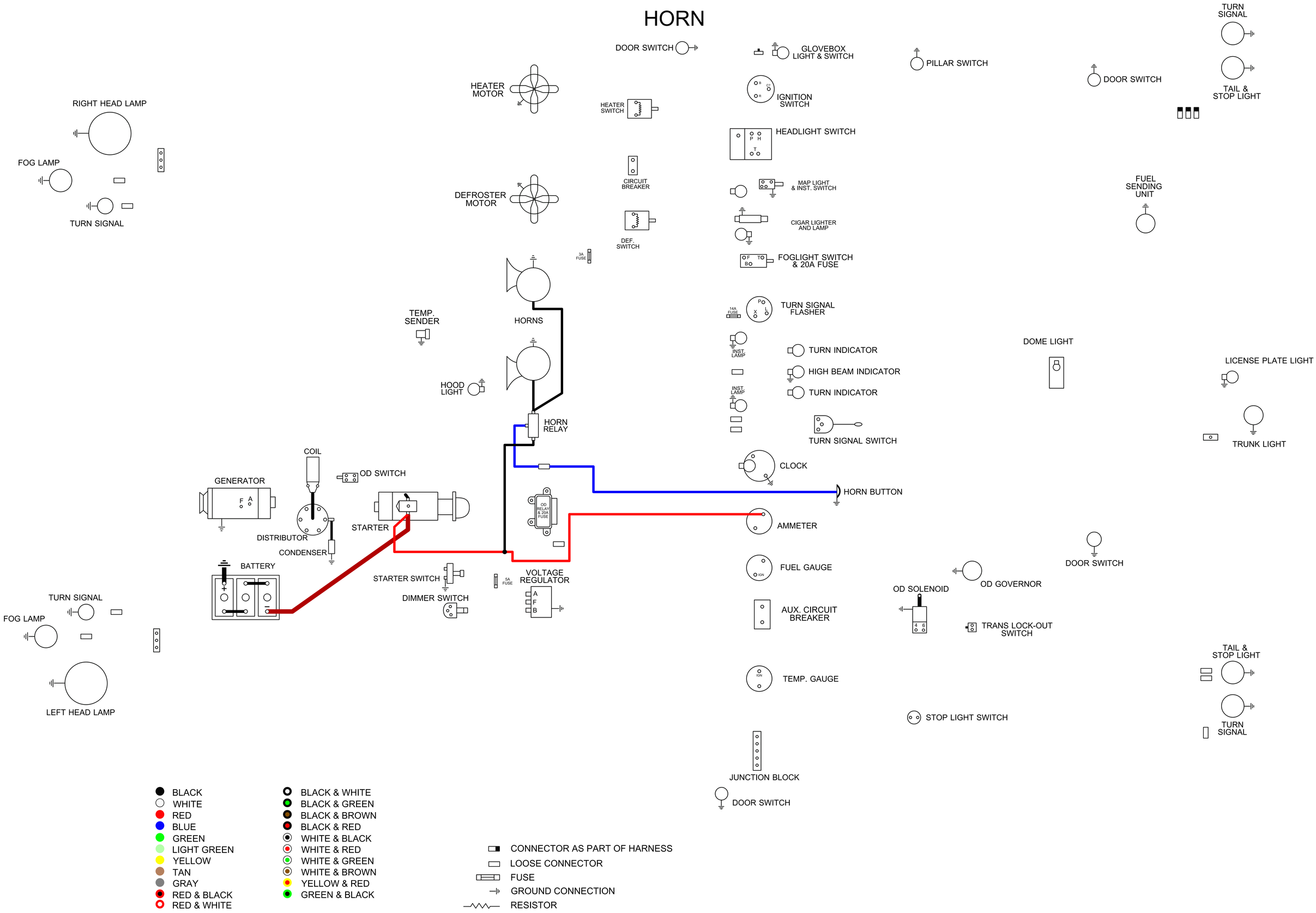

CINCO

1950 STUDEBAKER CHAMPION & COMMANDER

OVERDRIVE

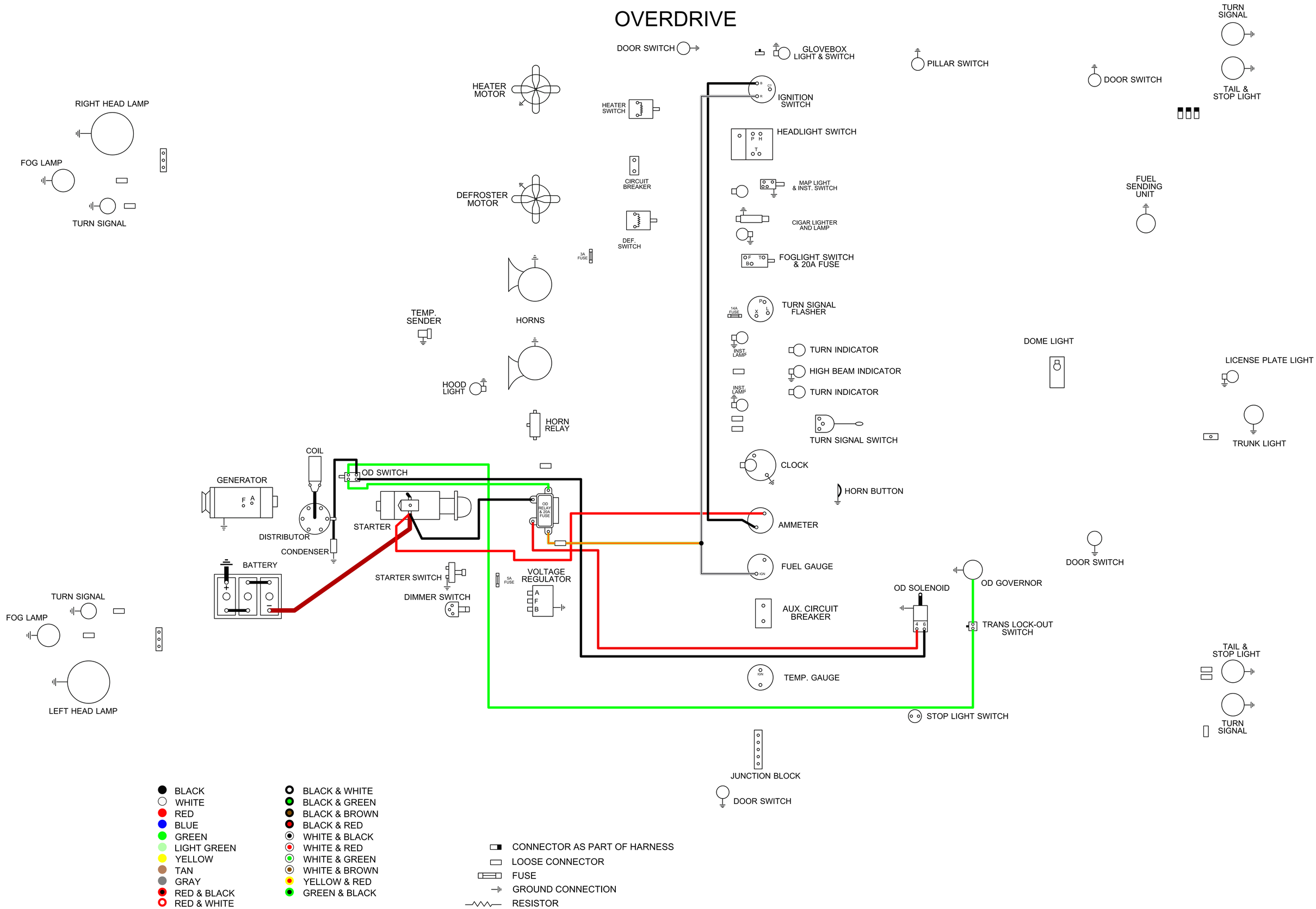

CINCO

1950 STUDEBAKER CHAMPION & COMMANDER

GAUGES

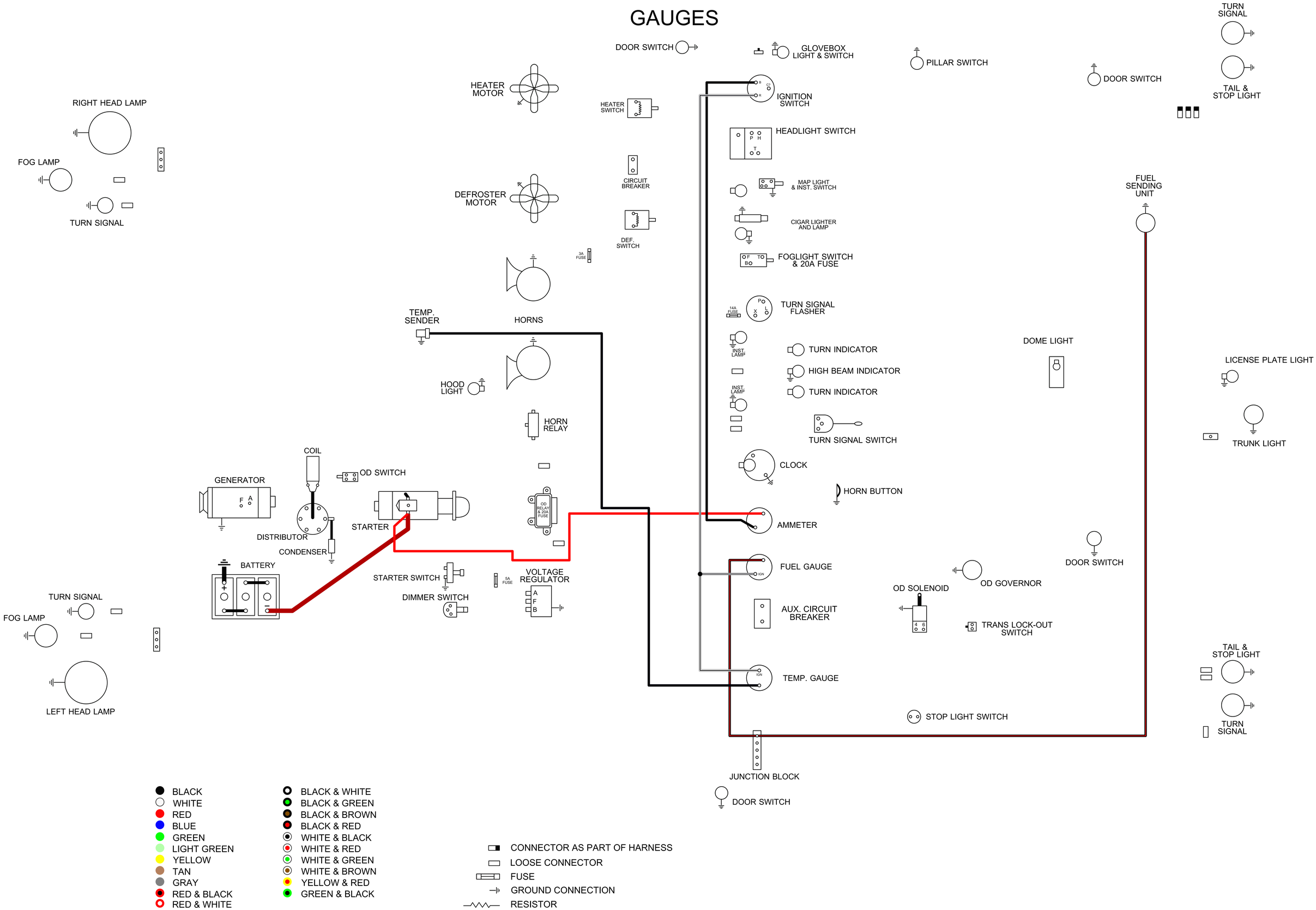

CINCO

1950 STUDEBAKER CHAMPION & COMMANDER

CONVERTIBLE TOP

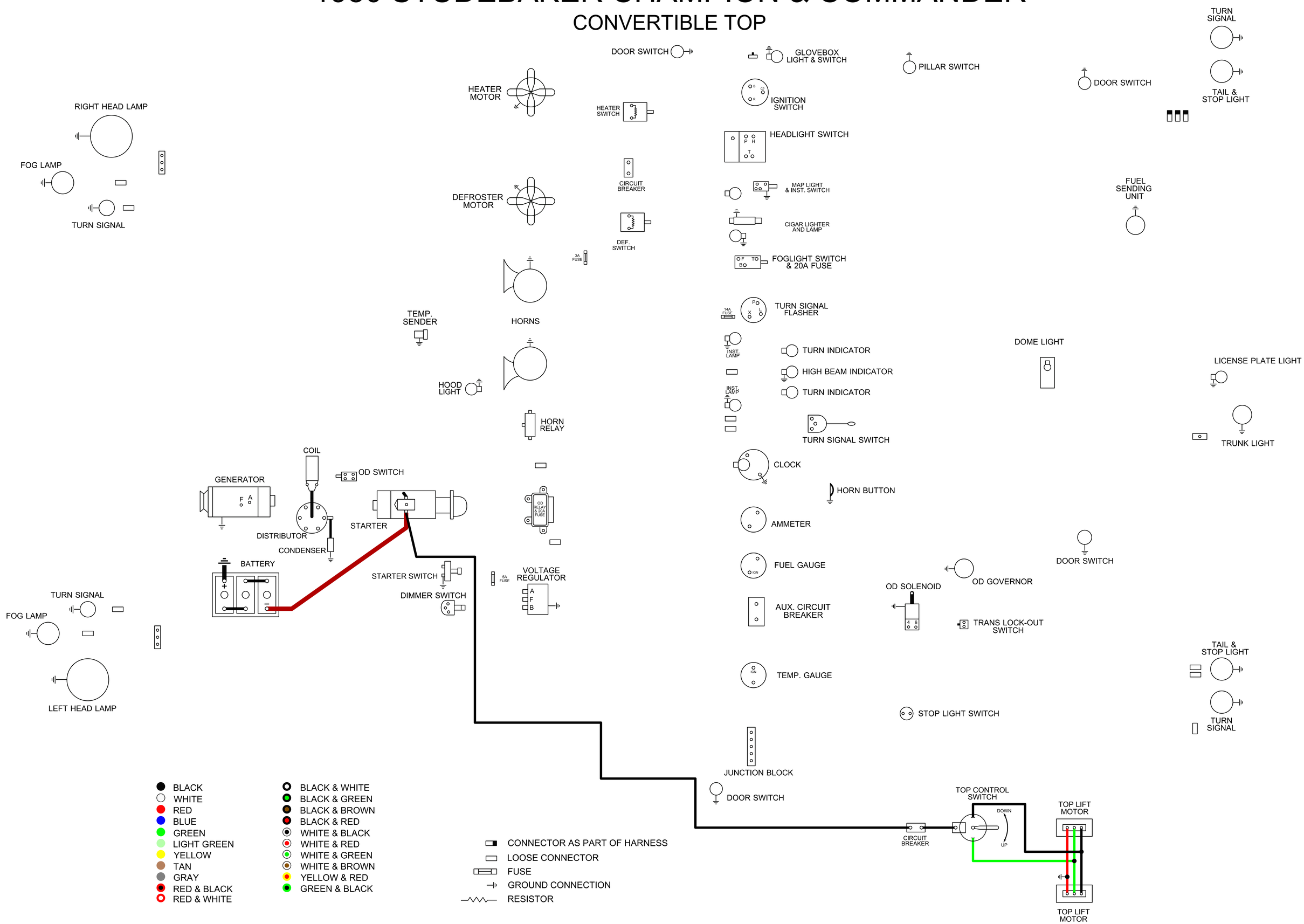

CINCO